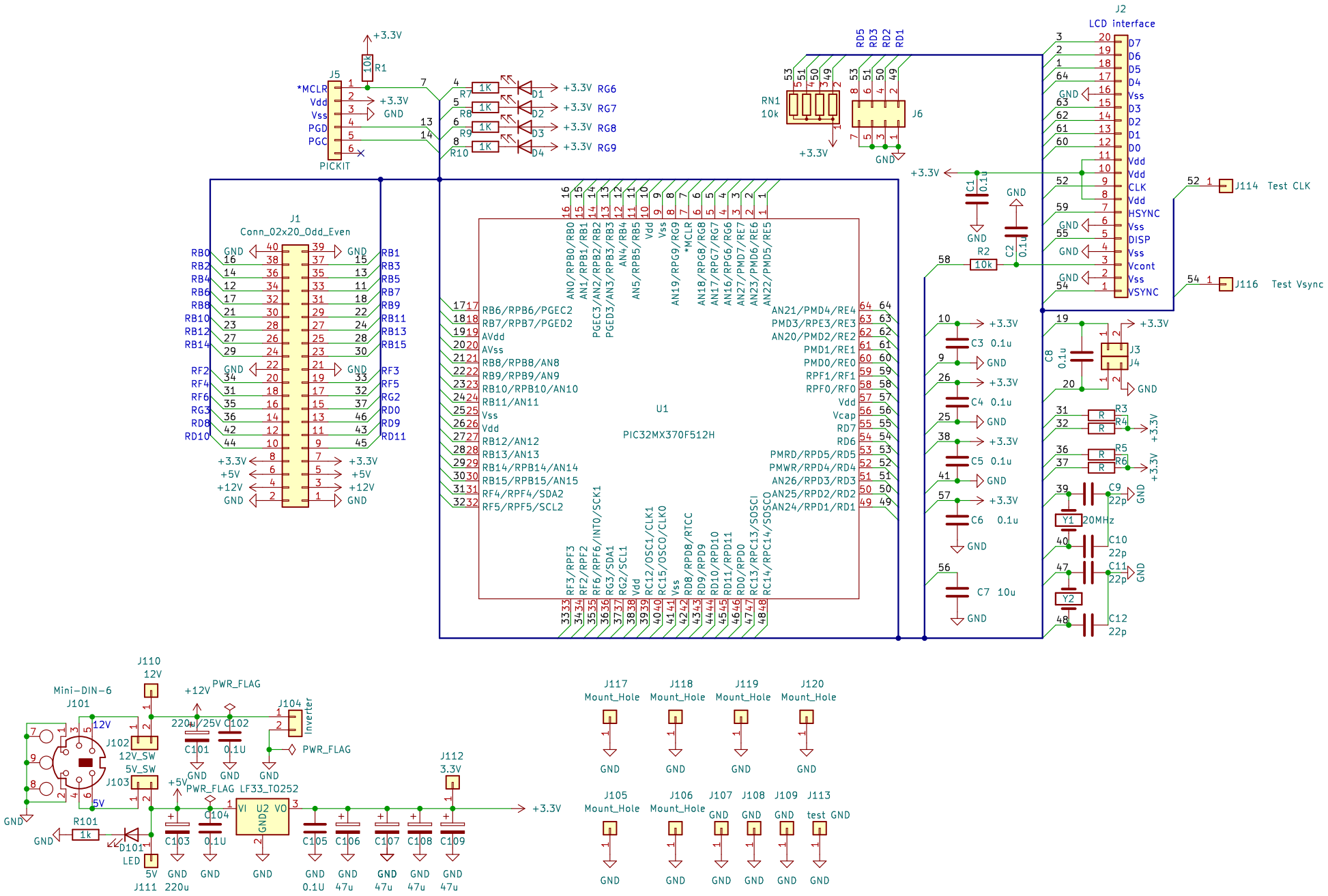
J5
PICKIT
*MCLR
Vdd
Vss
PGD
PGC
R1
10k
+3.3V
GND
R7 1K
R8 1K
R9 1K
R10 1K
D1
D2
D3
D4
RG6
RG7
RG8
RG9
RN1
10k
J6
RD5
RD3
RD2
RD1
J2
LCD interface
D7
D6
D5
D4
Vss
D3
D2
D1
D0
Vdd
CLK
HSYNC
DISP
Vcont
VSYNC
J114 Test CLK
J116 Test Vsync
J1
Conn_02x20_Odd_Even
U1
PIC32MX370F512H
RB6/RPB6/PGEC2
RB7/RPB7/PGED2
AVdd
AVss
RB8/RPB8/AN8
RB9/RPB9/AN9
RB10/RPB10/AN10
RB11/AN11
RB12/AN12
RB13/AN13
RB14/RPB14/AN14
RB15/RPB15/AN15
RF4/RPF4/SDA2
RF5/RPF5/SCL2
AN21/PMD4/RE4
PMD3/RPE3/RE3
AN20/PMD2/RE2
PMD1/RE1
PMD0/RE0
RPF1/RF1
RPF0/RF0
Vcap
RD7
RD6
PMRD/RPD5/RD5
PMWR/RPD4/RD4
AN26/RPD3/RD3
AN25/RPD2/RD2
AN24/RPD1/RD1
R2 10k
C1 0.1u
C2 0.1u
C3 0.1u
C4 0.1u
C5 0.1u
C6 0.1u
C7 10u
C8 0.1u
J3
J4
R3
R4
R5
R6
C9 22p
C10 22p
C11 22p
C12 22p
Y1 20MHz
Y2
Mini-DIN-6
J101
J110
12V
J102
12V_SW
5V_SW
J103
5V
PWR_FLAG
+12V
220u/25V C101
C102 0.1U
J104
Inverter
+5V
LF33_TO252
VI U2 VO
GND
C103 0.1U
C104 0.1U
C105 0.1U
C106 47u
C107 47u
C108 47u
C109 47u
J112
3.3V
R101 1k
D101
LED
J111 5V
220u
J117 Mount_Hole
J118 Mount_Hole
J119 Mount_Hole
J120 Mount_Hole
J105 Mount_Hole
J106 Mount_Hole
J107 GND
J108 GND
J109 GND
J113 test GND